SCHEMATIC DIAGRA

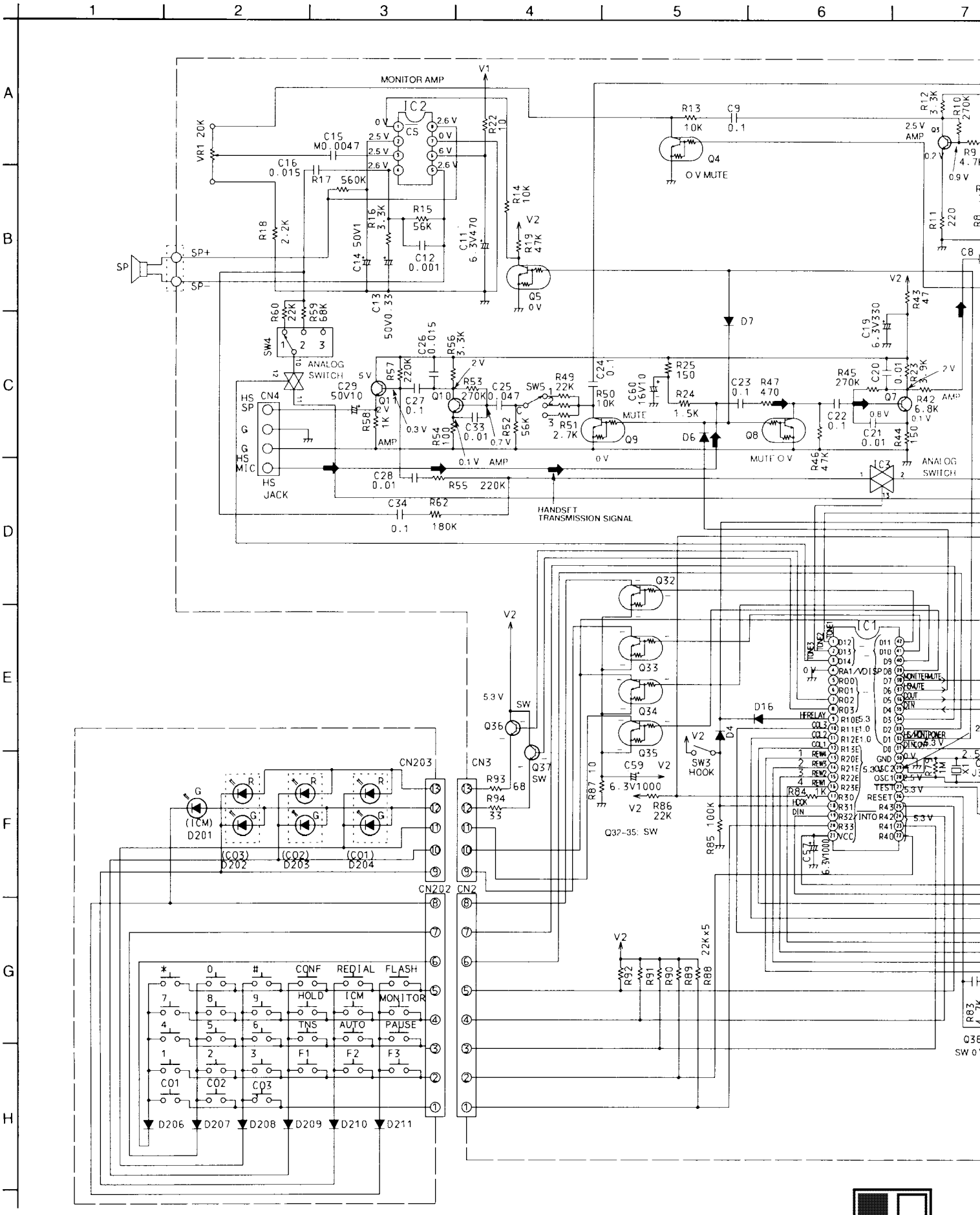

TIC DIAGRAM

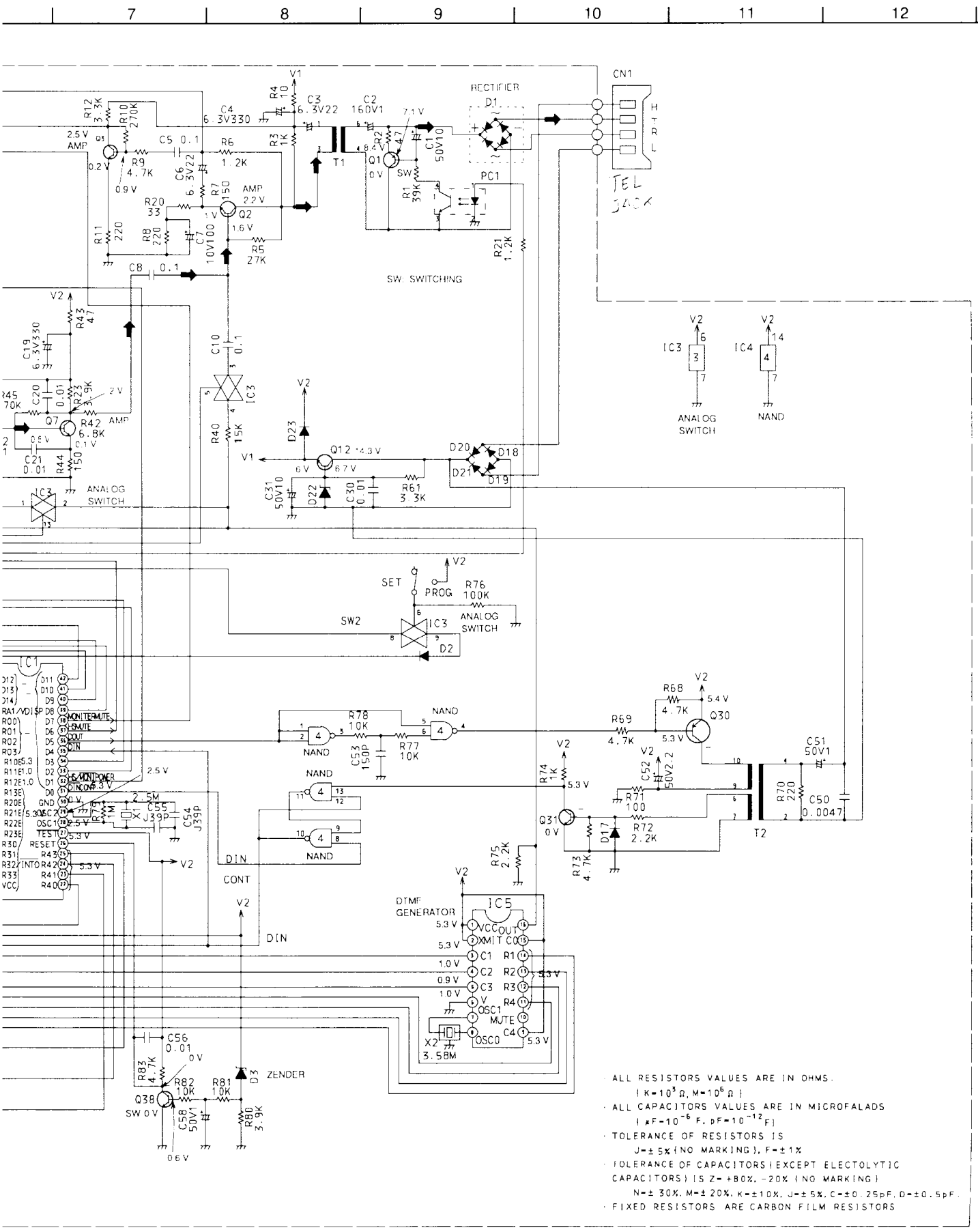
7
8
9
10
11
12
CN1
TEL JACK
RECTIFIER
D1
PC1
SW: SWITCHING
ANALOG SWITCH
NAND
DTMF GENERATOR
IC5
ZENDER
SET
PROG
R76 100K
SW2
D2
DIN
CONT
X1 J39P
X2 3.58M
T1
T2
Q1
Q2
Q7
Q12
Q30
Q31
Q38
IC1
IC3
IC4
IC5
V1
V2
ALL RESISTORS VALUES ARE IN OHMS.
{K=10³Ω, M=10⁶Ω}
ALL CAPACITORS VALUES ARE IN MICROFALADS
{μF=10⁻⁶F, pF=10⁻¹²F}
TOLERANCE OF RESISTORS IS
J=±5% (NO MARKING), F=±1%
TOLERANCE OF CAPACITORS (EXCEPT ELECTOLYTIC CAPACITORS) IS Z=+80%, -20% (NO MARKING)
N=±30%, M=±20%, K=±10%, J=±5%, C=±0.25pF, D=±0.5pF.
FIXED RESISTORS ARE CARBON FILM RESISTORS